Little polar bear (age 3-6 años)

Ref. KP4066

Last check: 11/11/2024

EN-1176-1:2018+A1:2023
EN-1176-6:2018+AC:2019

SERIE ANIMALS SERIES



General dimensions (m.)

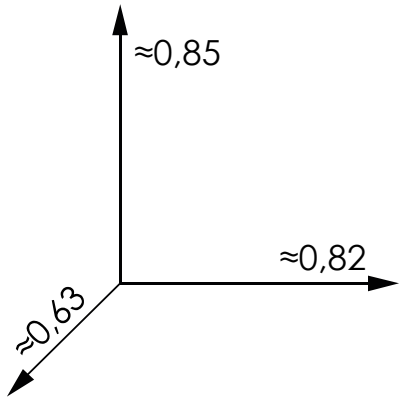

Information Technique.

Animal: Réalisé en polyester peint en masse, avec couche-gel de la couleur prédominante et traitement anti-graffiti. **Structure:** interne en acier pour ancrer sur le ressort. **Ressort:** En acier standard selon norme UNE 1176 recouvert de peinture polyester. **Fixations:** En acier galvanisé pour montage sur semelle de béton.

Détails techniques.

Montage: 1 pers. 1/2 heure. **Poids**: ≈ 30 Kg.
Hauteur totale: ≈ 0,80 m.
Hauteur chute libre: ≈ 0,60 m.
Aire de sécurité 7,8 m².
Dimensions de l'élément le plus grand: ≈ 0,85 m.
Disponibilité de pieces de rechange: 3 ans.

Safety area: 7,8 m²

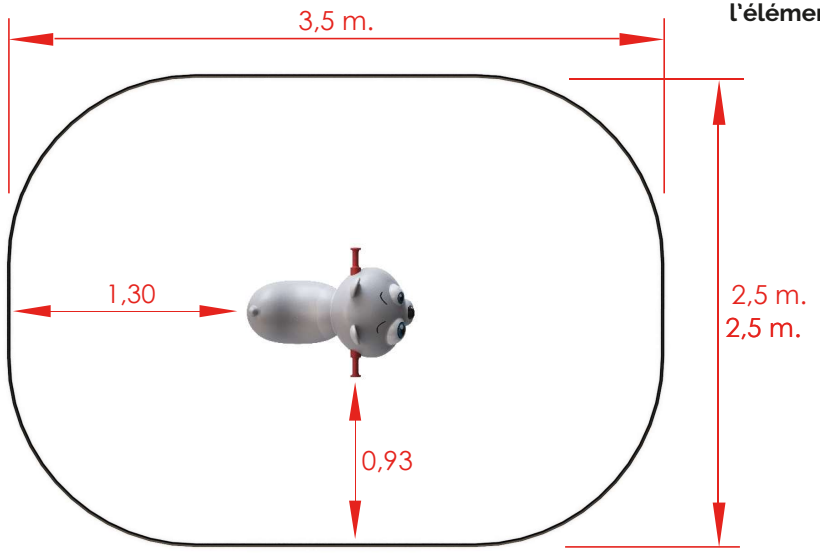

kiwi playgrounds
C/ Foia, 13
P.I. Alquería de Moret
46210 Picanya (Valencia)
+34 963 313 677
kiwi@kiwipw.com
kiwiplaygrounds.com

The company reserves the right to perform any modification or change in their products.

THE LITTLE ONES

SERIE ANIMALS SERIES



Anchoring detail.

Installation.
Screwed to concrete floor using expansion plugs or threaded rod and epoxy. Finished with compacted material coating either continuous wet-pour rubber surfacing or rubber tiles.

Maintenance:
Checking: all fixing points, screws and bolts must be periodically checked and tightened again if necessary. The checking date must be annotated in order to establish a control.

Inspections:
1. Routine visual inspection. An eye and functional inspection will be performed to verify that you have not suffered any vandalism damage.
2. Functional inspection. This inspection will be carried out with a periodicity of 1 to 3 months and attention should be paid to the components "sealed for life" and the equipment whose stability depends on a post.
3. Annual inspection. A complete inspection of the whole set will be carried out in order to verify that it meets all the sections of the standard and that it has not been modified.

Concrete slab dimensions.

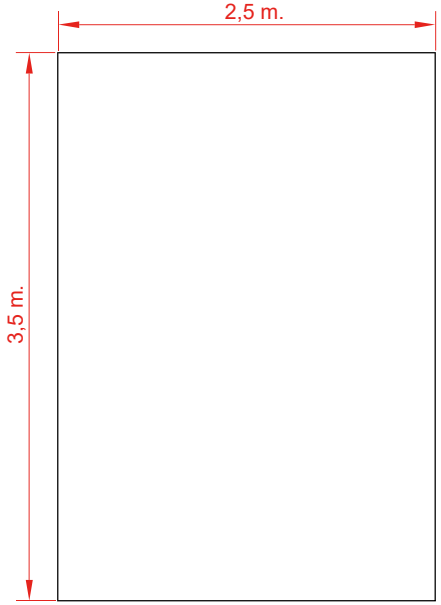

Spring Anchoring detail.

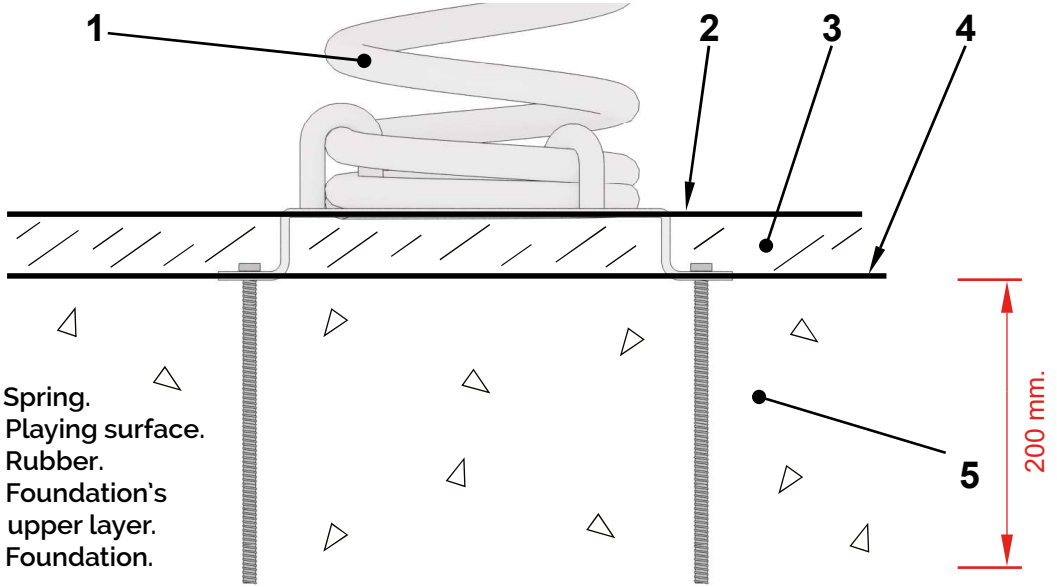

1 Spring.
2 Playing surface.
3 Rubber.
4 Foundation's upper layer.
5 Foundation.

kiwi playgrounds
C/ Foia, 13
P.I. Alquería de Moret
46210 Picanya
(Valencia)
+34 963 313 677
kiwi@kiwipw.com
kiwiplaygrounds.com

The company reserves the right to perform any modification or change in their products.

THE LITTLE ONES