Little rhinoceros (age 3-6 años)

Ref. KP4068

Last check: 11/11/2024

EN-1176-1:2018+A1:2023
EN-1176-6:2018+AC:2019

SERIE ANIMALS SERIES



Dimensions globales (m.)

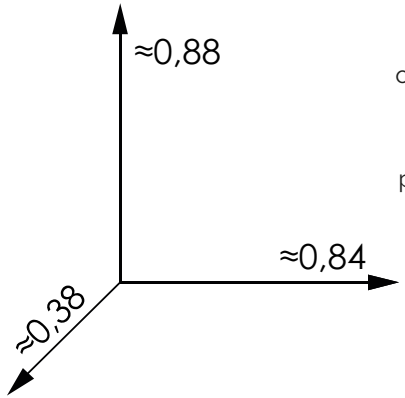

Technical information.

Animal: Main body made of polyester, painted by mass, with geal-coat of predominant color and antigraffiti treatment. **Structure:** Internal frame made of steel to be anchored to the spring. **Spring:** Standard made of steel s/ norm UNE1176 with thermosetting polyester coating. **Bindings:** Made in galvanized steel to be anchored on concrete deck.

Technical data.

Assembly: 1 pers. 1/2 hour.
Weight: ≈ 30 Kg.
Total height ≈ 0,80 m.
Free fall height: ≈ 0,60 m.
Safety area: 7,8 m².
Biggest piece dimension: ≈ 0,85 m.
Spare pieces availability: 3 years.

Safety area: 7,8 m²

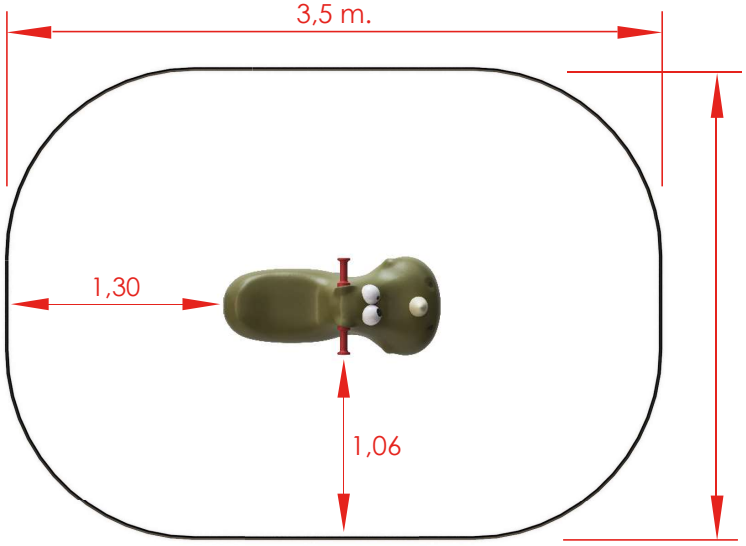

THE LITTLE ONES

kiwi playgrounds

C/ Foia, 13
P.I. Alquería de Moret
46210 Picanya
(Valencia)

+34 963 313 677

kiwi@kiwipw.com

kiwiplaygrounds.com

The company reserves the right to perform any modification or change in their products.

SERIE ANIMALS SERIES



Anchoring detail.

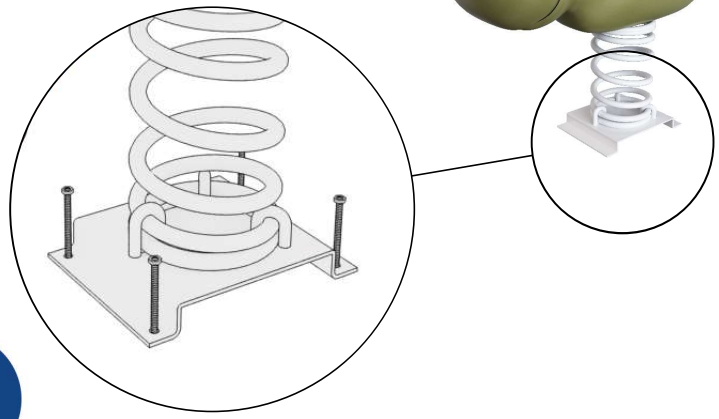

Installation.
Screwed to concrete floor using expansion plugs or threaded rod and epoxy. Finished with compacted material coating either continuous wet-pour rubber surfacing or rubber tiles.

Maintenance:
Checking: all fixing points, screws and bolts must be periodically checked and tightened again if necessary. The checking date must be annotated in order to establish a control.

Inspections:
1. Routine visual inspection. An eye and functional inspection will be performed to verify that you have not suffered any vandalism damage.
2. Functional inspection. This inspection will be carried out with a periodicity of 1 to 3 months and attention should be paid to the components "sealed for life" and the equipment whose stability depends on a post.
3. Annual inspection. A complete inspection of the whole set will be carried out in order to verify that it meets all the sections of the standard and that it has not been modified.

kiwi playgrounds
C/ Foia, 13
P.I. Alquería
de Moret
46210 Picanya
(Valencia)
+34 963 313 677
kiwi@kiwipw.com
kiwiplaygrounds.com

The company reserves the right to perform any modification or change in their products.

Concrete slab dimensions.

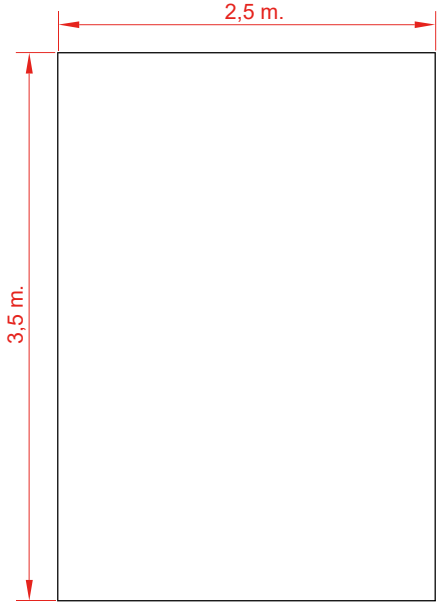

Spring Anchoring detail.

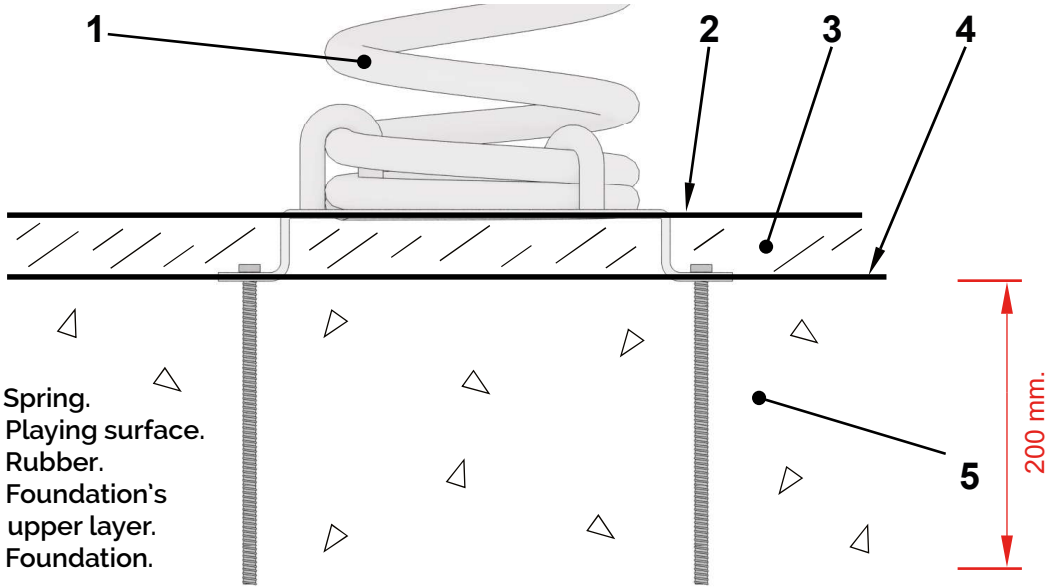

1 Spring.
2 Playing surface.
3 Rubber.
4 Foundation's upper layer.
5 Foundation.

THE LITTLE ONES