CRAB



EFFECT: Water spray

This item includes:



Trim

Made of INOX AISI 304 stainless steel

Shields users' bare feet; powder-coated with bright, long-lasting colors; built to withstand weather, water, and chlorine



Turn System

Constructed from brass

Allows for smooth, effortless 360˚ rotation Outstanding resistance to water and chlorine

CLEARANCE AREA

DIMENSIONS

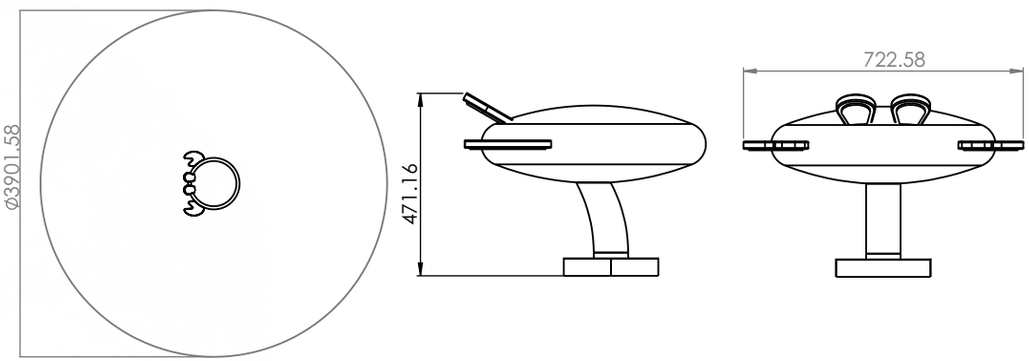

FLOW RATE

Flow Rate: 76–95 lpm

PRESSURE

Pressure: 0.7–1 Bar

COMPONENTS

COLORS

Steel set	**RAL 5015**
Body	**RAL 3020**
Eyes	**RAL 9004**

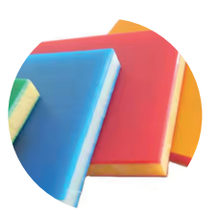

Opaque dual-color

Made from HDPE

UV-protected

Weather, water, and chlorine resistant