# TORTUGA

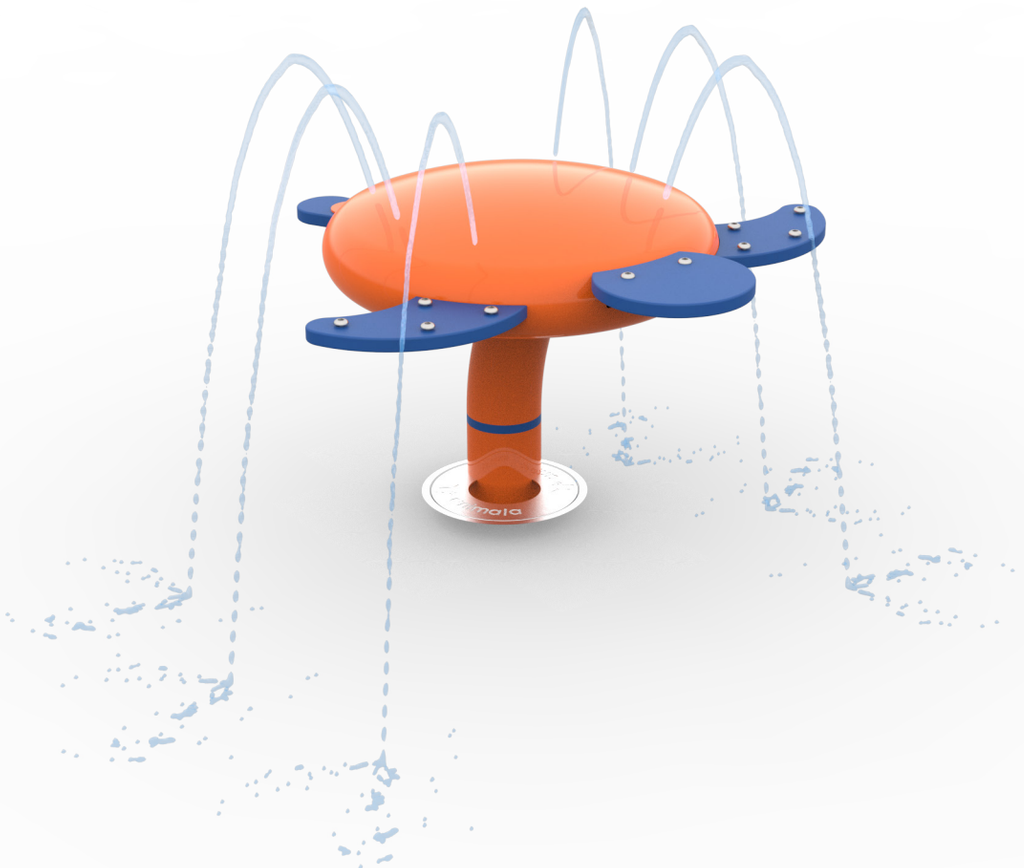

**EFFECT:** Water spray

## OPEN SPACE

## DIMENSIONS

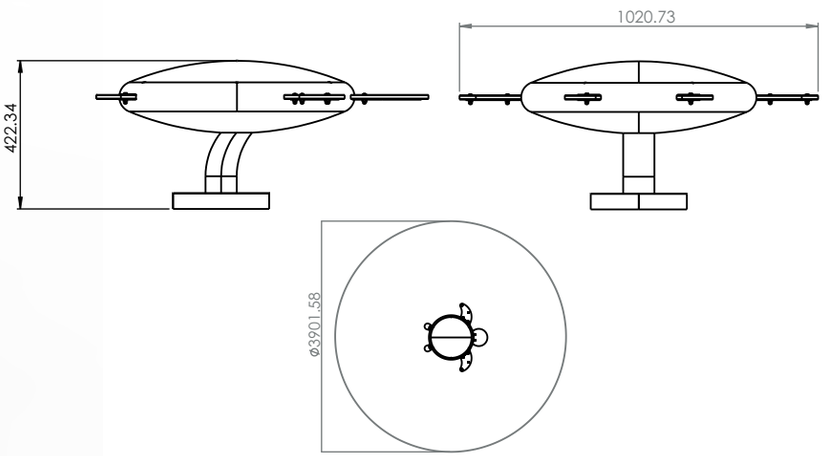


## FLOW RATE

**Flow Rate: 76-95 lpm**

## PRESSURE

**Pressure: 0.7-1 Bar**

## COMPONENTS

## COLORS

| | |
|---|---|
| **Accessories** | **RAL 5015** |
| **Body** | **RAL 2011** |

## This item comes with:



### Trim Cover

Made from INOX AISI 304 stainless steel

Protects bare feet, coated with bright, long-lasting oven-baked colors, weather, water, and chlorine resistant



### Turn System

Constructed from brass
Enables smooth, 360° rotation
Outstanding resistance to water and chlorine



### Matte two-tone

Made of HDPE
UV-protected
Weather, water, and chlorine resistant