ANMB06

WATER TUNNEL

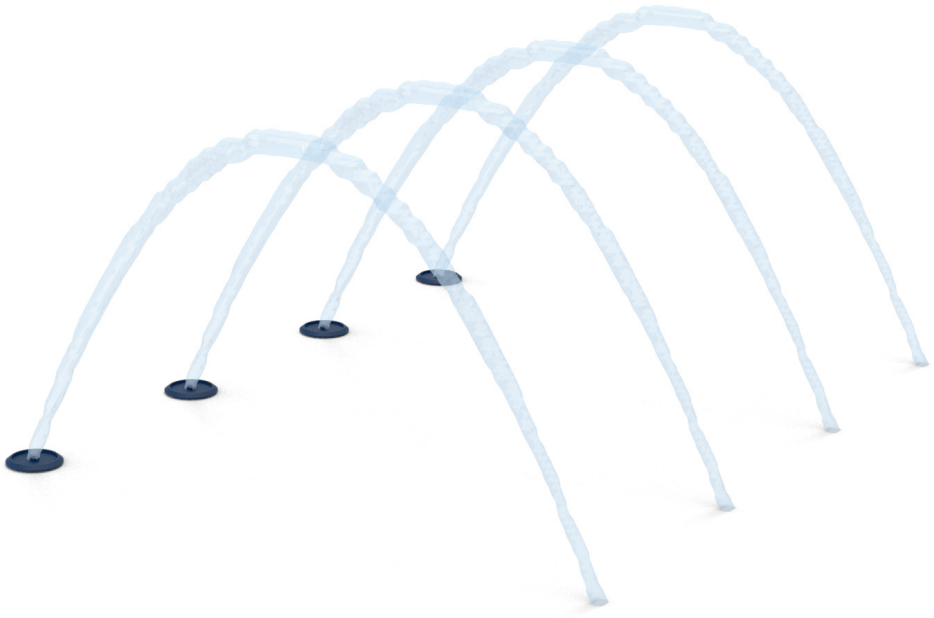

Specifications

3 - 12 years
years

1 user

max. 0m

Experience

PHYSICAL

SOCIAL

IMAGINATIVE

Description

The Water Tunnel is an interactive water play feature made up of four POM nozzles, creating a tunnel of water that kids can crawl through. It comes with mounting hardware for installation in a concrete slab, ensuring the nozzles sit flush at ground level.

Standard: UNE EN 1176-1:2018+A1:2024 and UNE EN 17232:2021

ANMB06

WATER TUNNEL

Overall Dimensions

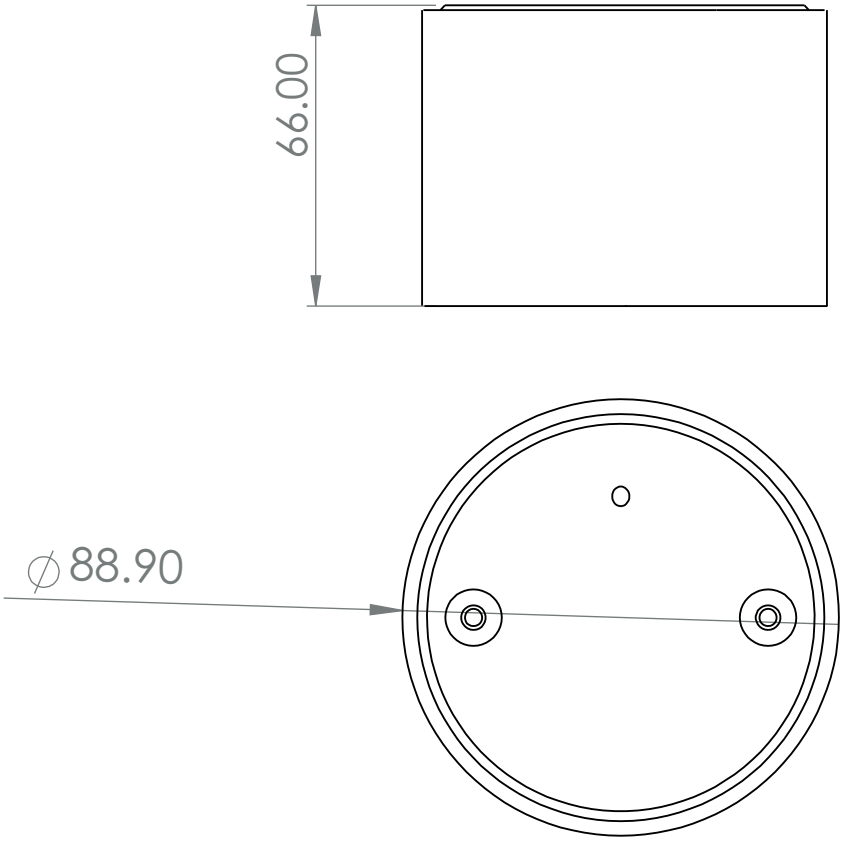

Impact Area

Surface and flooring requirements in accordance with UNE EN 1176-1:2018+A1:2024 and UNE EN 17232:2021 standards

ANMB06

WATER TUNNEL

Anchoring Method

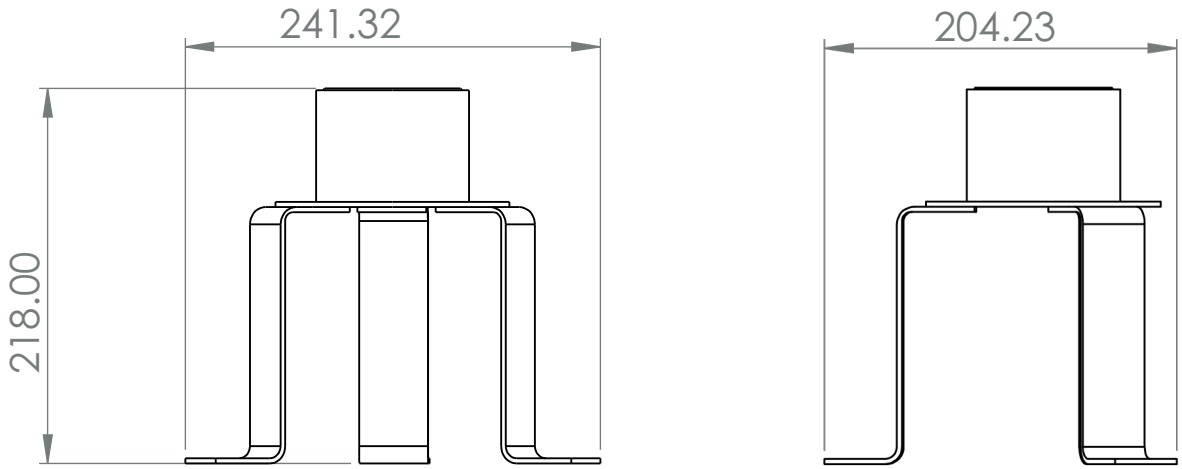

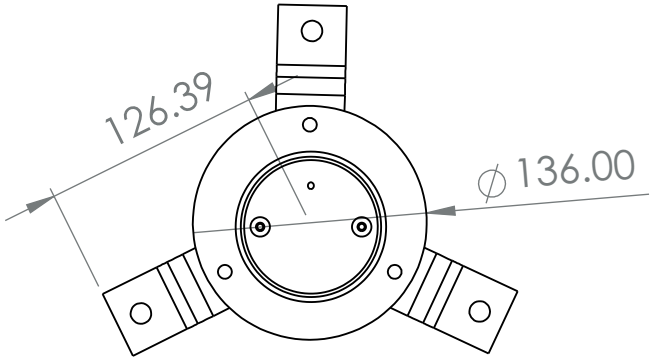

ANMB06

WATER TUNNEL

MATERIALS OVERVIEW

Frame: Made of AISI-304 Stainless Steel Plastic Pieces: ABS, Polypropylene, Polyethylene, or PVC Metal Pieces: AISI 304 Steel, brass, or AISI 316 Fasteners: AISI-304 or AISI-316 Steel

MAINTENANCE

Regular maintenance is necessary to keep the play equipment in top condition, ensuring users can enjoy it safely and without risk of injury.

Weekly: Visually check the play equipment to spot and rule out any damage or broken parts.

Monthly: Physically examine the play surfaces to make sure they're in good shape. Look for splinters, cracks, or any damage, and seal the joints if needed.

Make sure all parts of the play equipment are firmly anchored and stable.

Check that the play equipment is sturdy and inspect all protective covers and caps.

Annually: Carry out a thorough inspection, confirm all components are securely anchored, fix any damage, and identify any risks so they can be addressed.

MATERIAL DESCRIPTION

Frame: Constructed from AISI-304 Stainless Steel

Plastic Components: ABS, Polypropylene, Polyethylene, or

Metal Parts: AISI 304, brass, or AISI 316 Stainless Steel

Fasteners: Stainless Steel AISI-304 or AISI-316

MAINTENANCE

Regular maintenance must be carried out to ensure the play equipment remains in excellent condition for users to enjoy safely.

Weekly: Visually inspect the play equipment to make sure there are no visible damages or breaks.

Monthly: Check the play surfaces by hand to confirm they're in good shape. Look for any splinters, cracks, or damage. Seal joints if needed.

Make sure every part of the play equipment is anchored properly and stays firm and steady.

Check that the play equipment is secure and all protective covers and caps are in good condition.

Annually: Do a full inspection—confirm everything is anchored correctly, fix any damage, and spot any risks from use so repairs can be made right away.